makita®

PARTS BREAKDOWN

EB7650TH

rev 3_15-12-02

1 Volute Case, Cushion, Fuel Tank

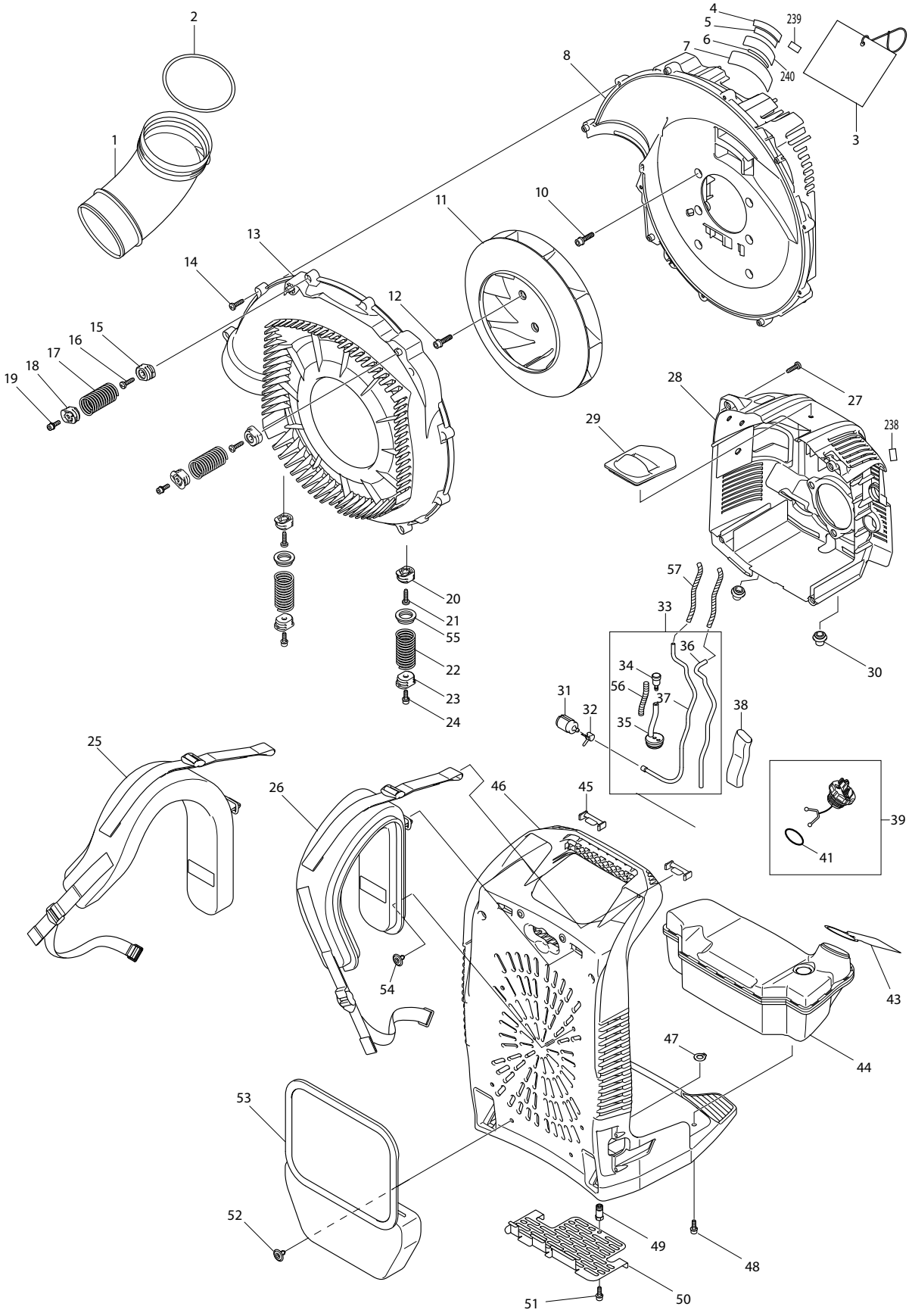

Products with multiple versions are listed in subsiding order with the newest version on top not indented.

Section	Fig. No.	Part No.	Description	EBH7650TH	Tech Bulletin	Notes
1	1	412144-8	ELBOW	1		
1	2	213645-7	O RING 93	1		
1	4	802K75-9	CAUTION LABEL	1		
1	5	803S72-6	CAUTION LABEL	1		
1	6	814E64-6	SERIAL NO. LABEL	1		
1	7	803W16-0	GAS EMISSION APPROVAL LABEL	1		
1	8	454893-1	FRONT VOLUTE CASE	1		
1	10	922343-9	H.S.H.BOLT M6X25 WITH WR	6		
1	11	240152-7	FAN 250	1		
1	12	922343-9	H.S.H.BOLT M6X25 WITH WR	4		
1	13	454892-3	REAR VOLUTE CASE	1		
1	14	266420-0	TAPPING SCREW 5X20	11		
1	15	454903-4	SPRING HOLDER A	2		
1	16	266420-0	TAPPING SCREW 5X20	2		
1	17	234324-4	COMPRESSION SPRING 22	2		
1	18	454904-2	SPRING HOLDER B	2		
1	19	922223-9	H.S.H.BOLT M5X16 WITH WR	2		
1	20	454903-4	SPRING HOLDER A	2		
1	21	266420-0	TAPPING SCREW 5X20	2		
1	22	234333-3	COMPRESSION SPRING 22	2		
1	23	454904-2	SPRING HOLDER B	2		
1	24	922223-9	H.S.H.BOLT M5X16 WITH WR	2		
1	25	166125-1	BAND L COMPLETE	1		
1	26	166126-9	BAND R COMPLETE	1		
1	27	266420-0	TAPPING SCREW 5X20	4		
1	28	142426-1	ENGIN COVER COMPLETE	1		
1	28	898343-0	CAUTION LABEL	1		
1	29	424619-5	PLUG COVER	1		
1	30	424620-0	DAMPER	2		
1	31	163532-9	FILTER	1		
1	32	345920-4	HOSE CLAMP	1		
1	33	126587-5	TUBE ASSEMBLY	1		INC. 34-37,56
1	34	168396-6	BREATHER	1		
1	35	424505-0	GROMMET	1		

Products with multiple versions are listed in subsiding order with the newest version on top not indented.

Section	Fig. No.	Part No.	Description	EBH7650TH	Tech Bulletin	Notes
1	36	422125-4	TUBE 3-370	1		
1	37	412114-7	FUEL TUBE 3-370	1		
1	38	422137-7	TUBE GUARD 20-102	1		
1	39	140831-6	TANK CAP COMPLETE	1		INC. 41
1	41	213080-9	O RING 29.5	1		
1	43	898428-2	CAUTION PLATE	1		
1	44	143014-7	FUEL TANK COMPLETE	1		
1	45	454905-0	BAND HOLDER	2		
1	46	454894-9	FRAME	1		
1	47	961005-4	RETAINING RING S-9	1		
1	48	922223-9	H.S.H.BOLT M5X16 WITH WR	2		
1	49	264098-3	HEX NUT M5-10	1		
1	50	346771-8	GUARD	1		
1	51	922223-9	H.S.H.BOLT M5X16 WITH WR	1		
1	52	667-25003-00	ROCK RIVET	4		
1	53	166127-7	CUSHION	1		
1	54	667-25003-00	ROCK RIVET	2		
1	55	424678-9	RUBBER RING 25	2		
1	56	326356-6	COIL SPRING 8	1		
1	57	454425-4	SPIRAL TUBE 6-100	2		
1	239	803S73-4	SOUND 76DB LABEL	1		

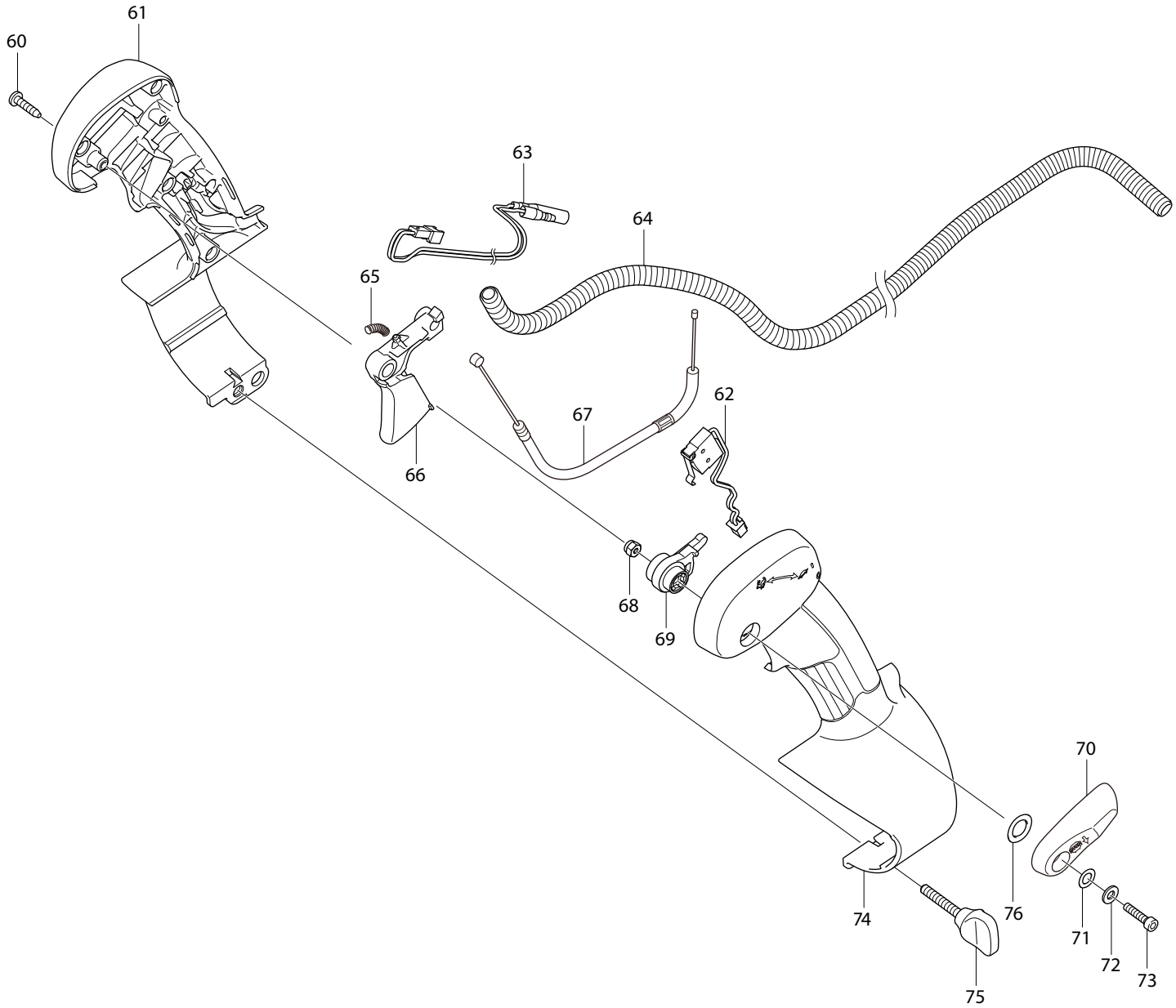
60
61
63
64
65
66
67
62
68
69
70
71
72
73
74
75
76

Products with multiple versions are listed in subsiding order with the newest version on top not indented.

Section	Fig. No.	Part No.	Description	EBH7650TH	Tech Bulletin	Notes
2	60	266326-2	TAPPING SCREW 4X18	5		
2	61	187804-8	LEVER CASE SET	1		INC. 74
2	62	638642-6	SWITCH UNIT	1		
2	63	632C07-2	LEAD UNIT	1		
2	64	455191-6	CORRUGATE TUBE	1		
2	65	231469-9	COMPRESSION SPRING 4	1		
2	66	454899-9	THROTTLE LEVER A	1		
2	67	168843-7	CONTROL CABLE	1		
2	68	252126-6	HEX. LOCKING NUT M4-7	1		
2	69	454924-6	THROTTLE LINK	1		
2	70	454900-0	THROTTLE LEVER B	1		
2	71	253903-9	WAVE WASHER 6	1		
2	72	267010-2	FLAT WASHER 5	1		
2	73	922132-2	HEX. SOCKET HEAD BOLT M4X18	1		
2	74	187804-8	LEVER CASE SET	1		INC. 61
2	75	265762-9	THUMB SCREW M5X30	1		
2	76	253052-2	FLAT WASHER 12	1		

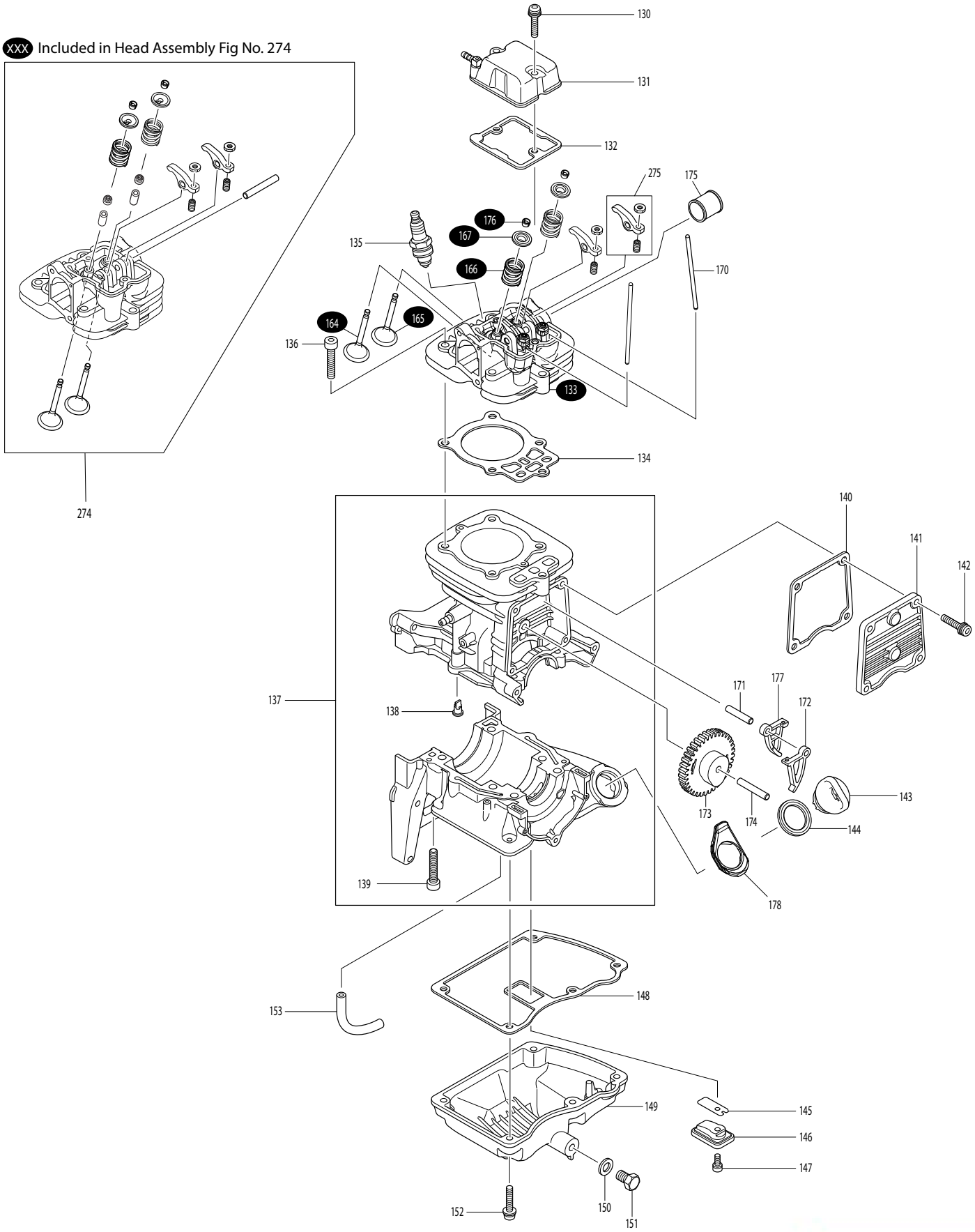
XXX Included in Head Assembly Fig No. 274
130
131
132
275
175
176
167
135
166
170
164
165
136
133
134
274
140
141
142
137
138
171
177
172
173
174
143
144
139
178
153
148
149
145
146
147
152
150
151

Products with multiple versions are listed in subsiding order with the newest version on top not indented.

Section	Fig. No.	Part No.	Description	EBH7650TH	Tech Bulletin	Notes
3	130	266789-2	H.S.H.BOLT M5X30 WITH WR	2		
3	131	141771-1	ROCKER COVER COMPLETE	1		
3	132	597-15009-00	ROCKER COVER GASKET	1		
3	133	142771-4	CYLINDER HEAD COMPLETE	1		
3	133	264024-2	HEX. NUT M5	1		
3	133	266728-2	ADJUSTING SCREW	1		
3	134	442167-2	CYLINDER HEAD GASKET	1		
3	135	168401-9	SPARK PLUG	1		
3	136	266586-6	H.S.H.BOLT M6X35	5		
3	137	135631-7	CYLINDER BLOCK ASSEMBLY	1		INC. 138,139
3	138	424201-0	CHECK VALVE	2		
3	139	922352-8	HEX. SOCKET HEAD BOLT M6X30	6		
3	140	442168-0	CAM GEAR GASKET	1		
3	141	318725-5	CAM GEAR COVER	1		
3	142	266813-1	H.S.H.BOLT M5X16 WITH WR	4		
3	143	452047-4	OIL CAP	1		
3	144	424343-0	GASKET	1		
3	145	346083-9	LEAD VALVE	1		
3	146	593-15013-00	RETAINER PLATE	1		
3	147	011-90499-80	SOCKET HEAD BOLT M4X10	1		
3	148	597-65001-00	OIL CASE GASKET	1		
3	149	319008-6	OIL CASE	1		
3	150	346452-4	GASKET	1		
3	151	266916-1	HEX. BOLT M8X12	1		
3	152	011-90593-90	SOCKET HEAD BOLT M5X25	5		
3	153	085-11099-60	TUBE	1		
3	164	331964-0	INTAKE VALVE	1		
3	165	331965-8	EXHAUST VALVE	1		
3	166	234212-5	COMPRESSION SPRING 11	2		
3	167	331966-6	RETAINER	2		
3	170	256526-2	PUSH ROD	2		
3	171	256186-0	PIN 5	1		
3	172	313266-6	CAM LIFTER L	1		
3	173	597-30020-02	CAMGEAR ASSY	1		

Products with multiple versions are listed in subsiding order with the newest version on top not indented.

Section	Fig. No.	Part No.	Description	EBH7650TH	Tech Bulletin	Notes
3	174	256200-2	PIN 5	1		
3	175	331937-3	EXHAUST PORT SPACER	1		
3	176	331967-4	COTTER	4		
3	177	313267-4	CAM LIFTER R	1		
3	178	424621-8	OIL GUARD	1		
3	274	135619-7	CYLINDER HEAD ASS'Y 76CC	1		
3	274	135600-8	HEAD ASSEMBLY	1		

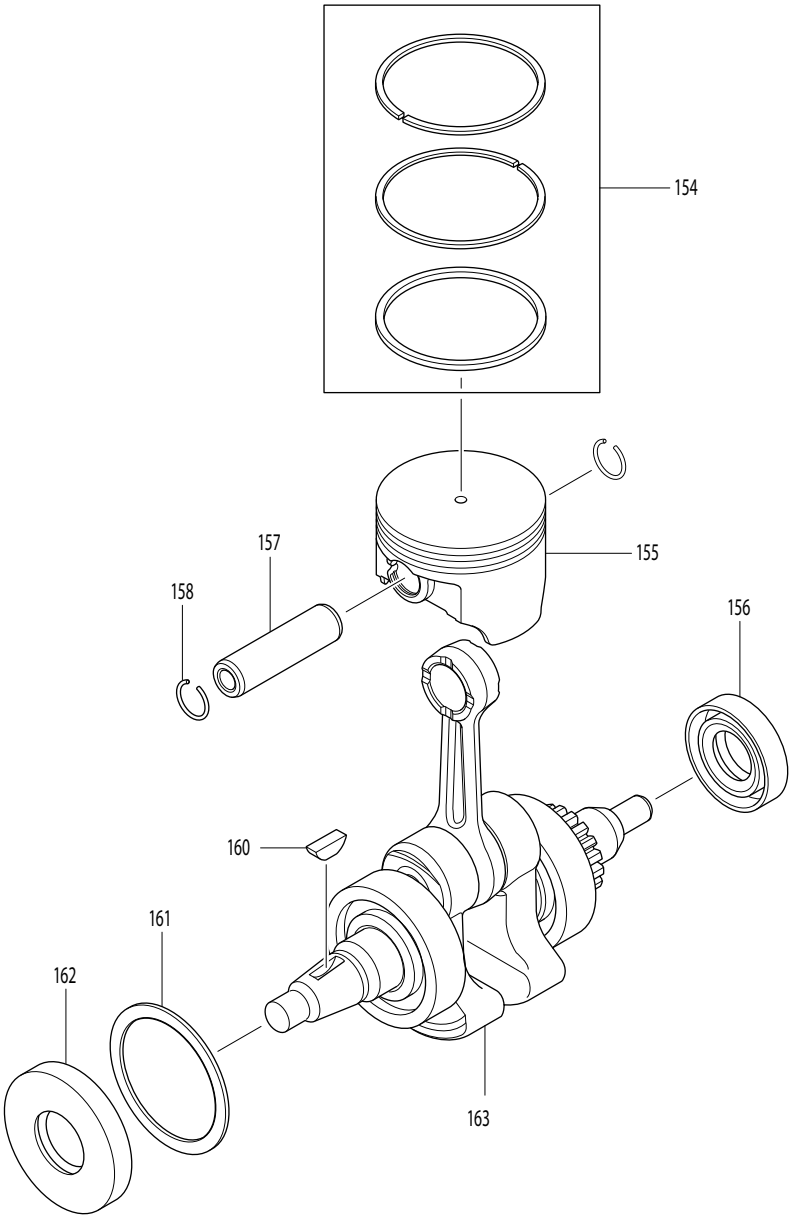
154
155
156
157
158
160
161
162
163

Products with multiple versions are listed in subsiding order with the newest version on top not indented.

Section	Fig. No.	Part No.	Description	EBH7650TH	Tech Bulletin	Notes
4	154	197040-8	ACCESSORY SET	1		
4	155	318726-3	PISTON	1		
4	156	213599-8	OIL SEAL 17	1		
4	157	326039-8	PISTON PIN	1		
4	158	233995-4	RING SPRING 12	2		
4	160	254001-2	WOODRUFF KEY 4	1		
4	161	267448-1	FLAT WASHER 41	1		
4	162	213598-0	OIL SEAL(L)	1		
4	163	143043-0	CRANK SHAFT COMPLETE	1		

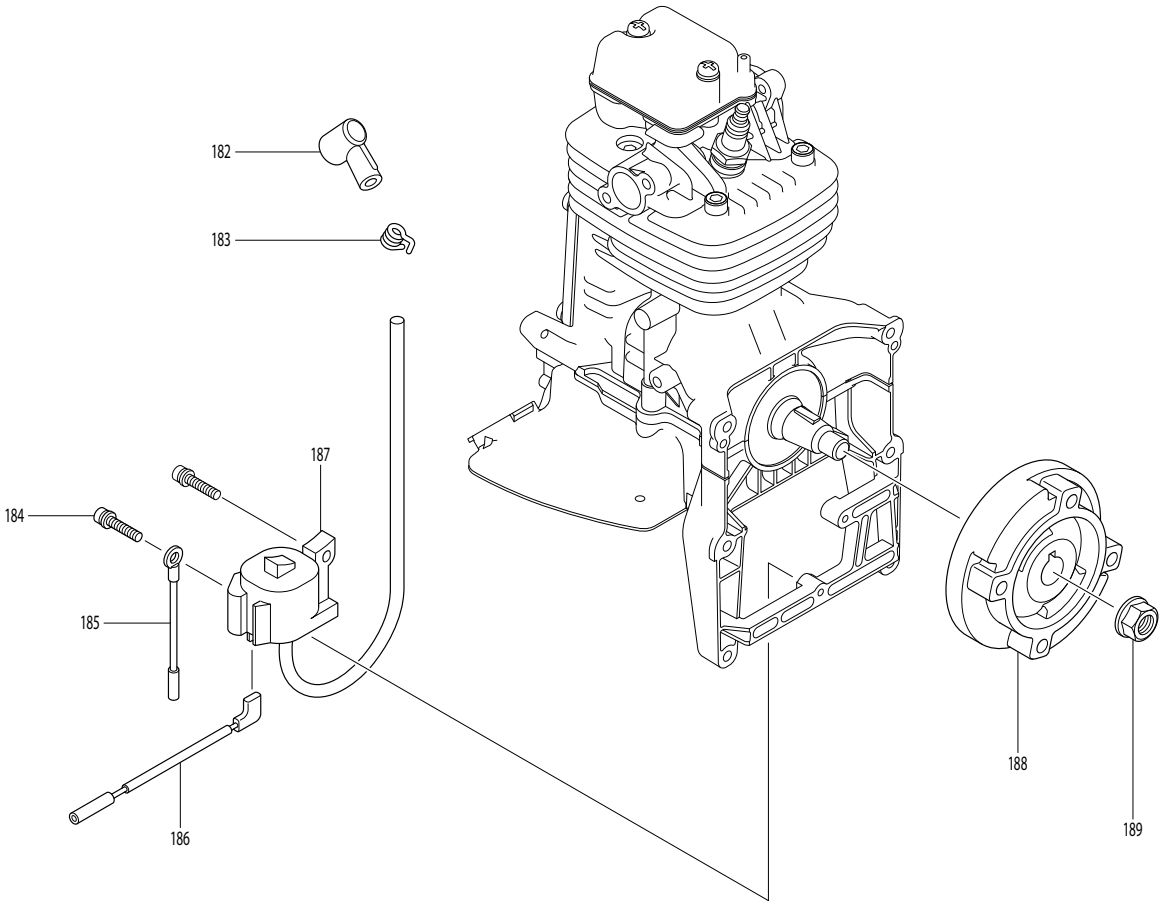
182
183
187
184
185
186
188
189

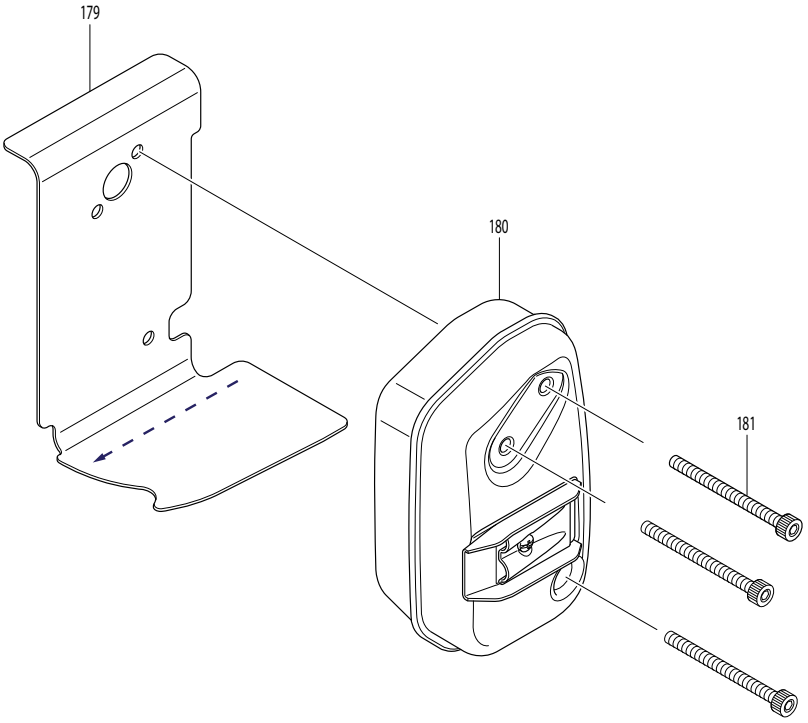
179
180
181

Products with multiple versions are listed in subsiding order with the newest version on top not indented.

Section	Fig. No.	Part No.	Description	EBH7650TH	Tech Bulletin	Notes
5	179	346772-6	MUFFLER GASKET	1		
5	180	597-30010-03	MUFFLER EXHAUST	1		
5	181	266771-1	SOCKET HEAD BOLT M6X18	3		
5	182	424105-6	PLUG CAP	1		
5	183	324891-8	PLUG CAP SPRING	1		
5	184	011-90499-70	SOCKET HEAD BOLT M4X20	2		
5	185	632C08-0	LEAD UNIT	1		
5	186	638710-5	LEAD WIRE	1		
5	187	597-70010-10	IGNITION COIL	1		
5	188	597-70010-20	FLYWHEEL COMPL	1		
5	189	264054-3	FLANGE NUT M10	1		

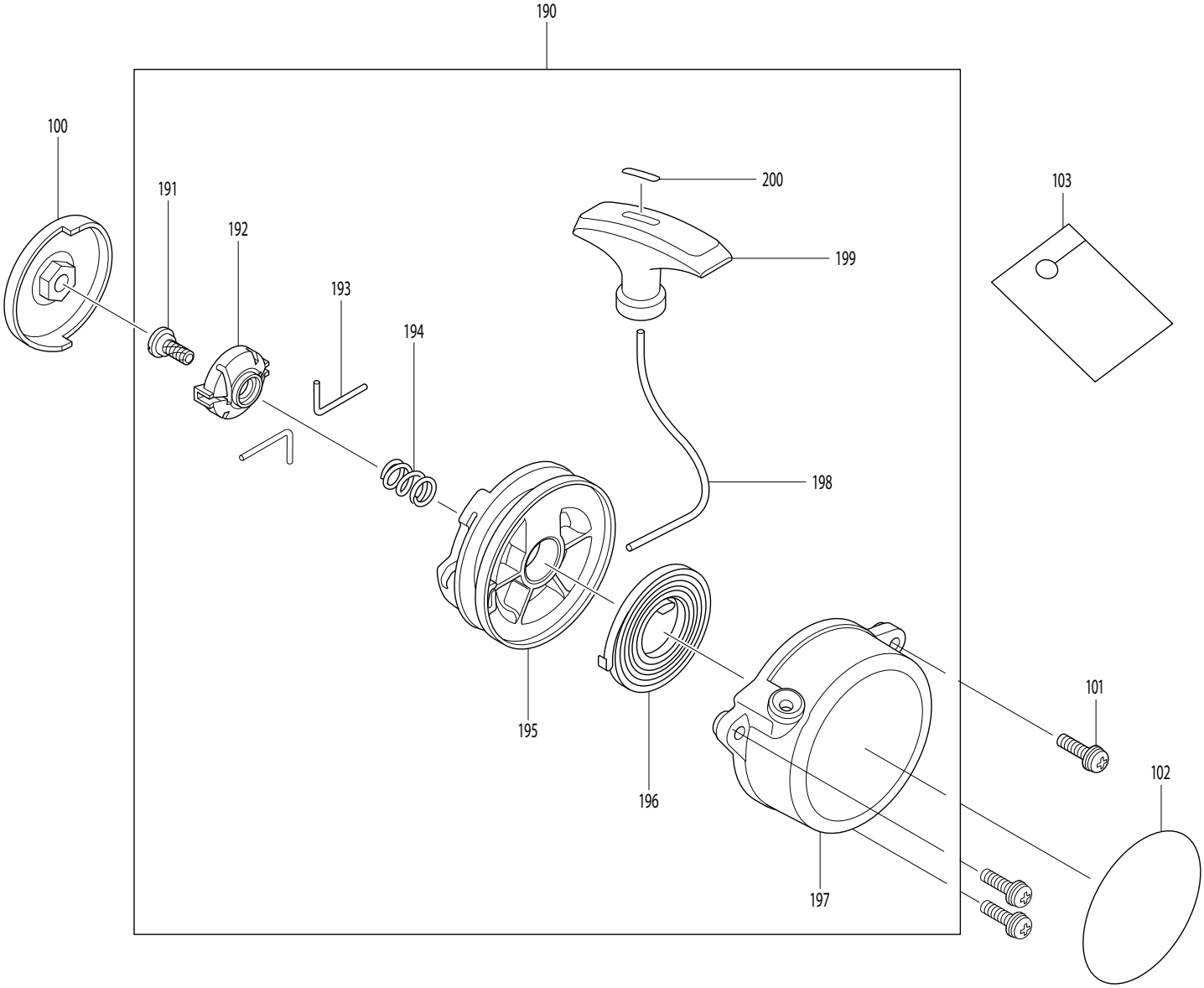
190
100
191
192
193
194
200
199
103
198
195
196
197
101
102

Products with multiple versions are listed in subsiding order with the newest version on top not indented.

Section	Fig. No.	Part No.	Description	EBH7650TH	Tech Bulletin	Notes
6	100	597-55000-00	PULLEY	1		
6	101	911233-1	PAN HEAD SCREW M5X20	3		
6	102	803S70-0	EB7650TH MODEL NO. LABEL	1		
6	103	819432-8	CAUTION TAG	1		
6	190	126165-1	RECOIL	1		INC. 191-200
6	191	266585-8	TAPPING SCREW 5X12	1		
6	192	424516-5	COLLAR	1		
6	193	326200-7	SWING ARM	2		
6	194	234257-3	FRICTION SPRING	1		
6	195	441075-4	REEL	1		
6	196	232262-4	SPIRAL SPRING	1		
6	197	141649-8	STARTER CASE COMPLETE	1		
6	198	444043-6	STARTER ROPE	1		
6	199	424361-8	STARTER KNOB	1		
6	200	424360-0	ROPE STOPPER	1		

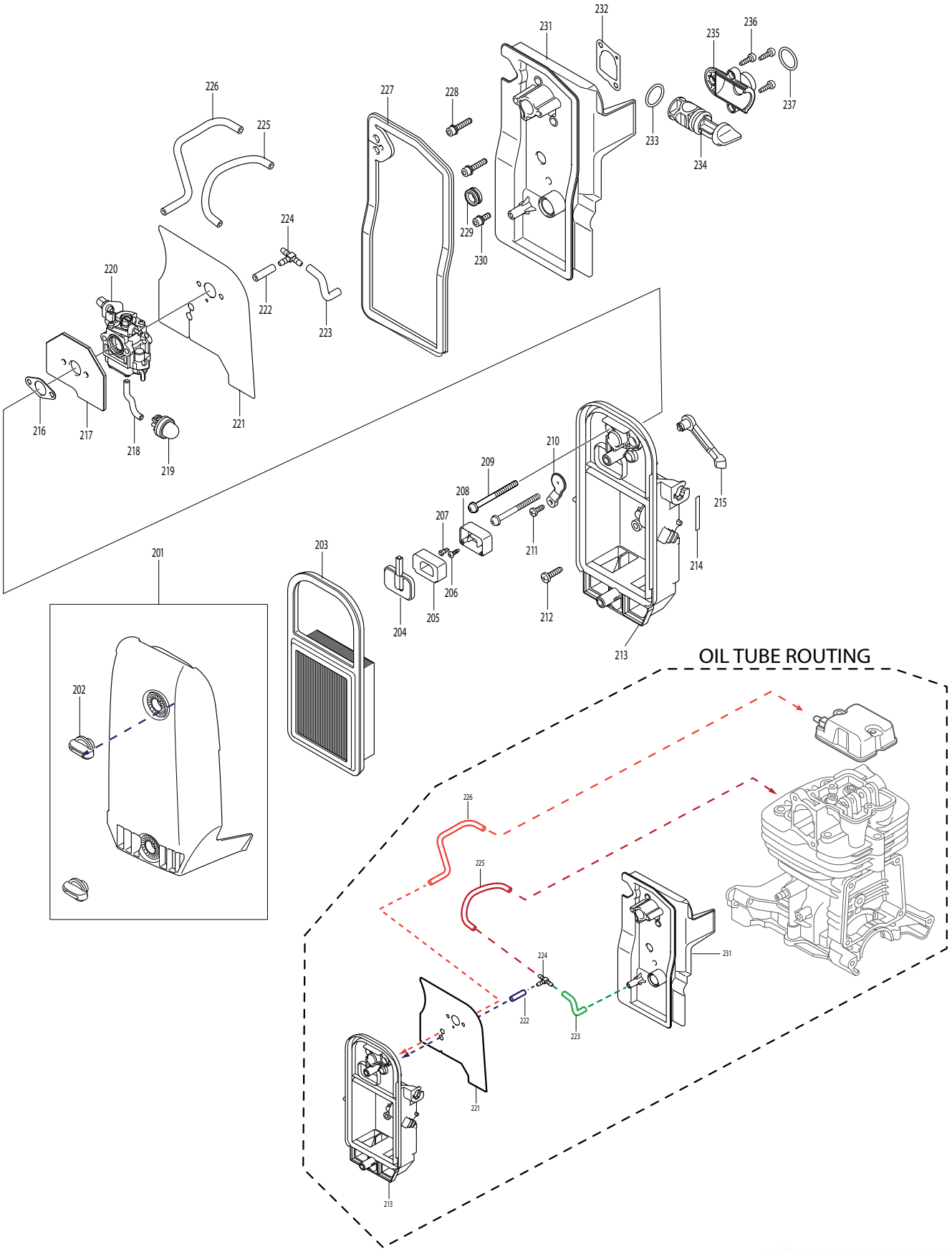
226
225
227
228
231
232
235
236
237
233
234
229
230
224
220
222
223
216
217
218
219
221
210
209
208
207
211
215
214
203
201
206
205
204
212
213
202
OIL TUBE ROUTING
226
225
224
231
222
223
221
213

Products with multiple versions are listed in subsiding order with the newest version on top not indented.

Section	Fig. No.	Part No.	Description	EBH7650TH	Tech Bulletin	Notes
7	201	454914-9	AIR CLEANER COVER	1		
7	202	265799-6	THUMB SCREW M5X20	2		
7	203	412145-6	AIR CLEANER ELEMENT	1		
7	204	162346-3	SEPARATOR PLATE	1		
7	205	352020-3	SEPARATOR MESH	1		
7	206	266007-8	TAPPING SCREW BIND PT 3X10	1		
7	207	424316-3	CHECK VALVE	1		
7	208	453865-3	SEPARATOR CASE	1		
7	209	911283-6	PAN HEAD SCREW M5X60	2		
7	210	454910-7	CHOKE PLATE	1		
7	211	266192-7	TAPPING SCREW 4X14	1		
7	212	266420-0	TAPPING SCREW 5X20	1		
7	213	454913-1	AIR CLEANER CASE	1		
7	214	815N78-2	SERIAL NO. LABEL	1		
7	215	454902-6	CHOKE LEVER	1		
7	216	523-35042-00	CARBURETOR GASKET	1		
7	217	346770-0	PLATE 31	1		
7	218	412112-1	TUBE 3-60	1		
7	219	168398-2	PRIMER PUMP	1		
7	220	168859-2	CARBURETOR	1		INC. 250-273
7	221	442206-8	CARBURETOR GASKET	1		
7	222	422096-5	TUBE 3-25	1		
7	223	422127-0	TUBE 3-55	1		
7	224	452952-5	HOSE JOINT	1		
7	225	412121-0	TUBE 3-130	1		
7	226	422126-2	TUBE 3-160	1		
7	227	424622-6	INSULATOR SEAL	1		
7	228	266749-4	HEX. S.H.B. M5X25 WITH WR	2		
7	229	424623-4	GROMMET	1		
7	230	922218-2	H.S.H. BOLT M5X14 WITH WR, EM2650LH	1		
7	230	011-90594-90	SOCKET HEAD BOLT M5X14 (W,SW)	1		
7	231	142926-1	INSULATOR COMPLETE	1		
7	232	162333-2	INSULATOR GASKET	1		
7	233	213304-3	O RING 20	1		

Products with multiple versions are listed in subsiding order with the newest version on top not indented.

Section	Fig. No.	Part No.	Description	EBH7650TH	Tech Bulletin	Notes
7	234	454911-5	ICING VALVE	1		
7	235	454912-3	ICING VALVE COVER	1		
7	236	266192-7	TAPPING SCREW 4X14	3		
7	237	213261-5	O RING 17	1		

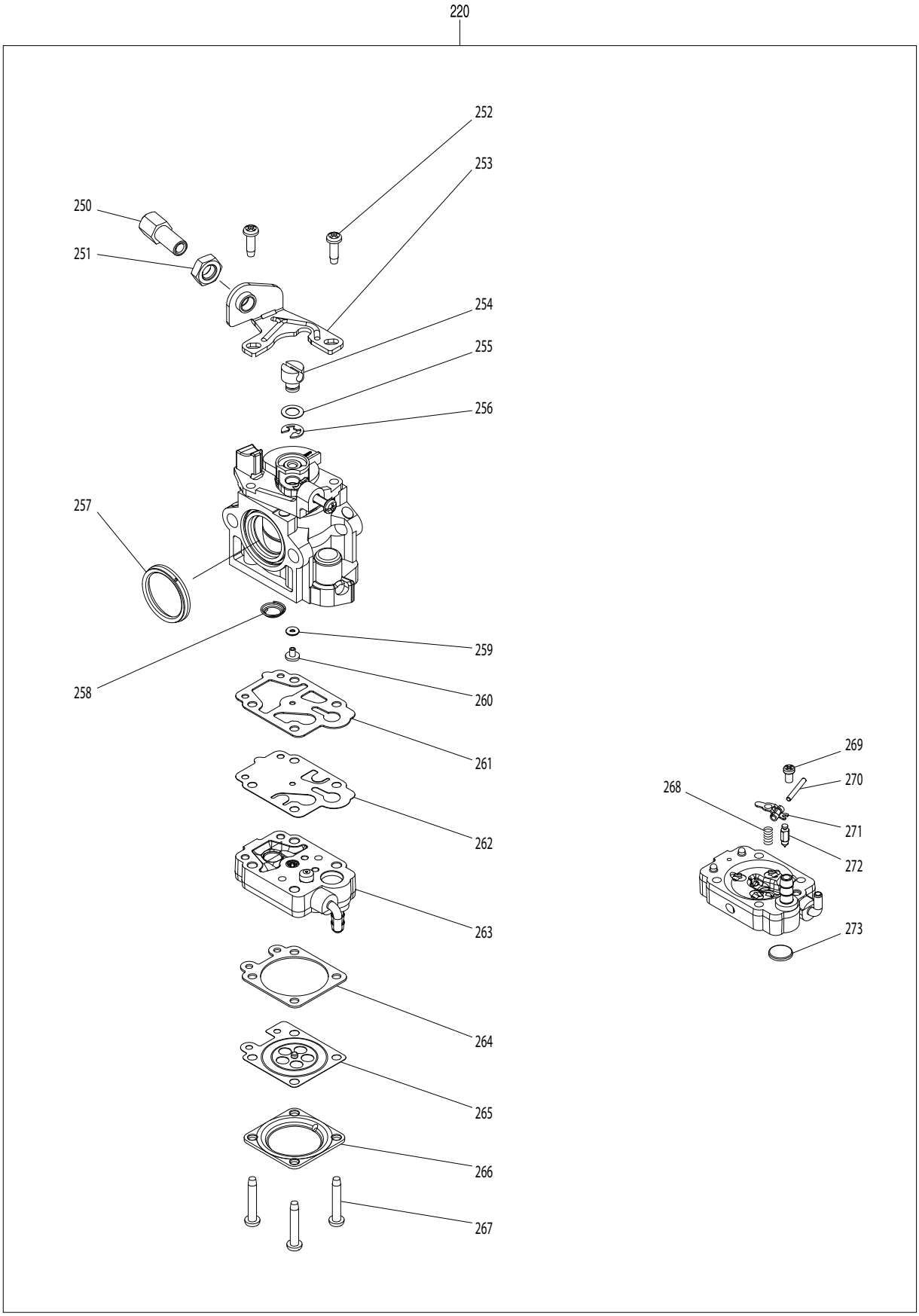
220
252
253
250
251
254
255
256
257
259
258
260
261
262
263
264
265
266
267
269
270
268
271
272
273

Products with multiple versions are listed in subsiding order with the newest version on top not indented.

Section	Fig. No.	Part No.	Description	EBH7650TH	Tech Bulletin	Notes
8	220	168859-2	CARBURETOR	1		INC. 250-273
8	250	266795-7	ADJUST SCREW	1		
8	251	264065-8	CABLE ADJUST NUT M6	1		
8	252	266704-6	PAN HEAD SCREW M3X10	2		
8	253	346491-4	BRACKET CABLE	1		
8	254	325922-6	SWIVEL	1		
8	255	413140-9	WASHER	1		
8	256	257964-1	STOP RING E-3	1		
8	257	424444-4	PACKING RING	1		
8	258	234183-6	CONICAL COMPRESSION SPRING 5-9	1		
8	259	WJ00016104	O RING	1		
8	260	WJ00112478	MAIN JET	1		
8	261	442155-9	PUMP GASKET	1		
8	262	168575-6	PUMP DIAPHRAGM	1		
8	263	141672-3	PUMP BODY ASSEMBLY	1		
8	264	442183-4	METERING DIAPHRAGM GASKET	1		
8	265	168620-7	METERING DIAPHRAGM	1		
8	266	WJ00021158	COVER-METERING DIAPHRAGM	1		
8	267	WJ00096325	SCREW	4		
8	268	WJ00983160	SPRING	1		
8	269	WJ00096424	SCREW	1		
8	270	WJ00014477	PIN-METERING LEVER	1		
8	271	WJ00016648	LEVER	1		
8	272	WJ00008282	VALVE-INLET NEEDLE	1		
8	273	352010-6	INLET SCREEN	1		

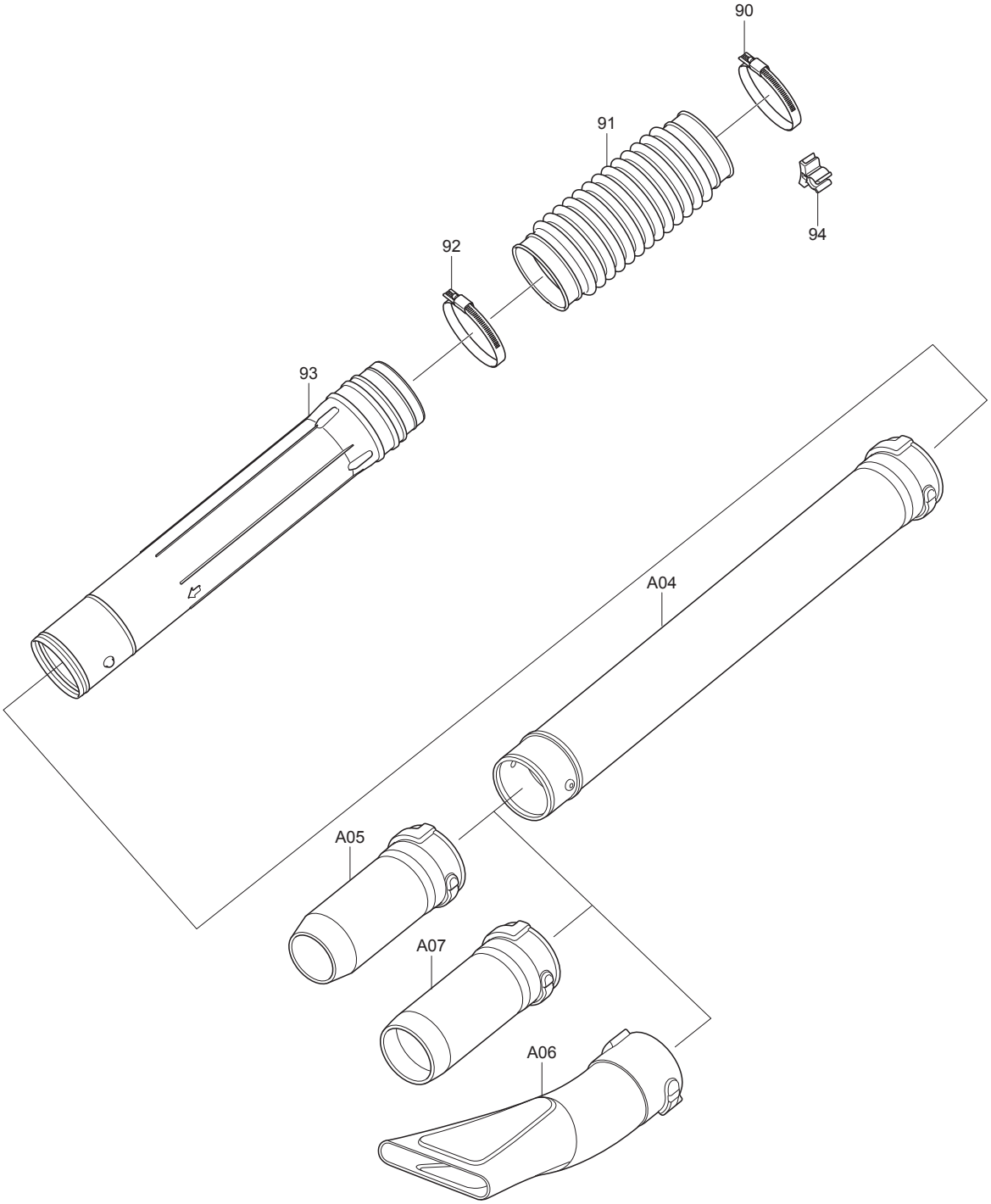
90
91
94
92
93
A04
A05
A07
A06

Products with multiple versions are listed in subsiding order with the newest version on top not indented.

Section	Fig. No.	Part No.	Description	EBH7650TH	Tech Bulletin	Notes
9	90	282025-8	HOSE CLAMP 100	1		
9	91	454934-3	FLEXIBLE PIPE	1		
9	92	282025-8	HOSE CLAMP 100	1		
9	93	168832-2	SWIVEL PIPE COMPLETE	1		
9	94	454922-0	CABLE HOLDER	1		
9	A04	454895-7	LONG PIPE 90	1		
9	A05	454896-5	END NOZZLE 90-60	1		
9	A06	454916-5	FLAT NOZZLE 90	1		
9	A07	455128-3	END NOZZLE 90-70	1		